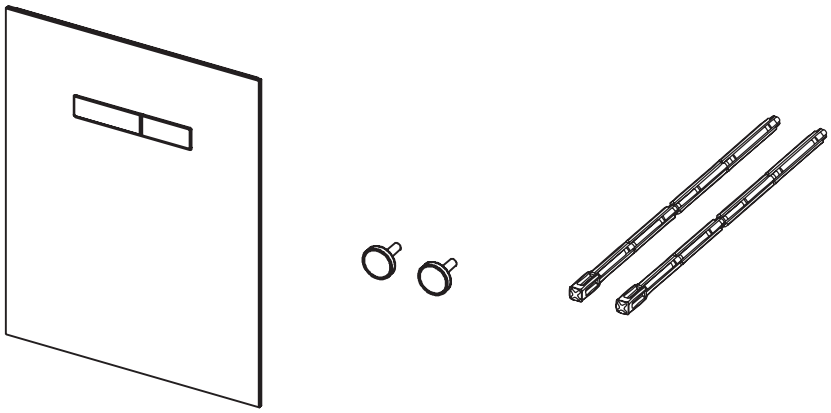

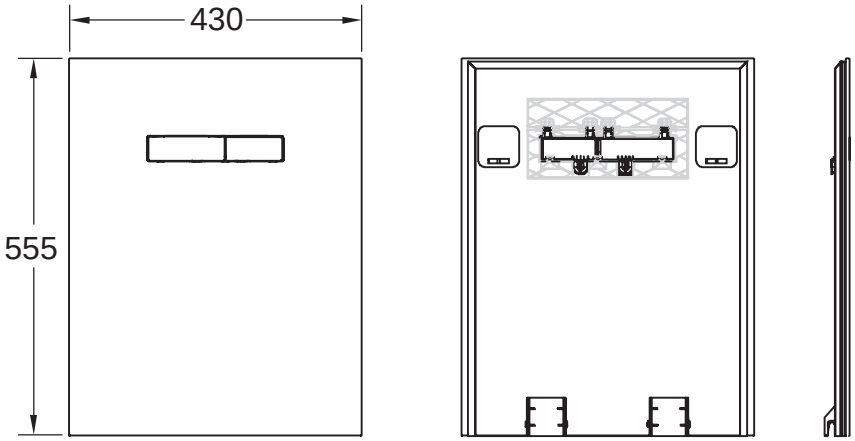
430
555

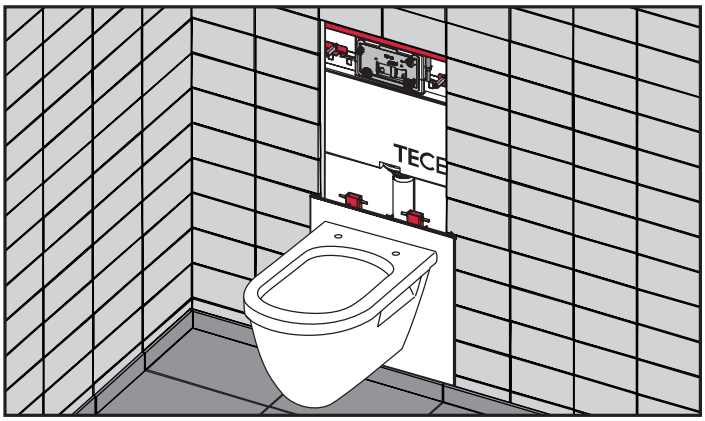
TECE

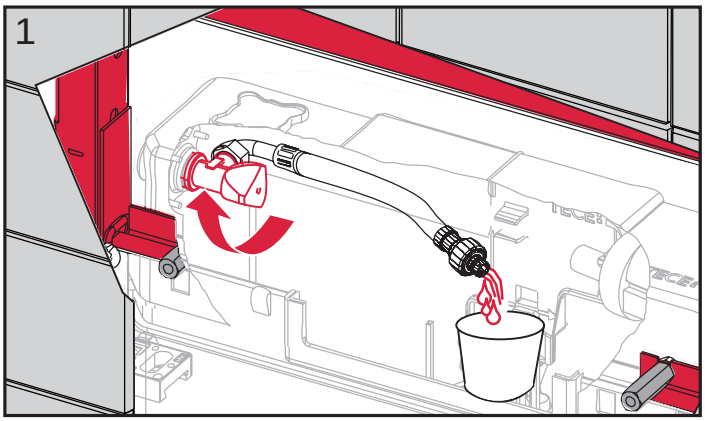
1

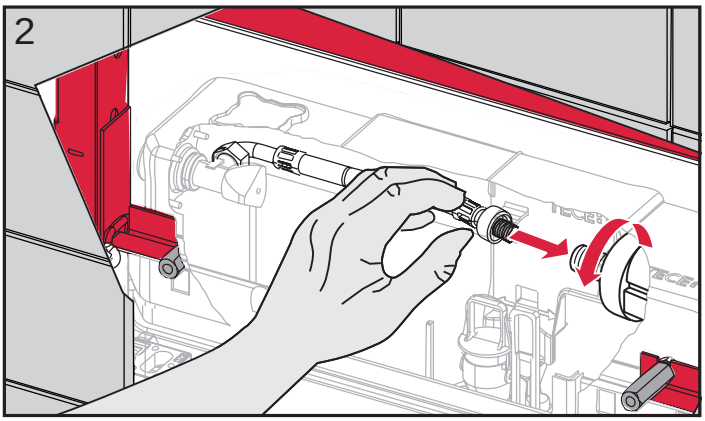
2

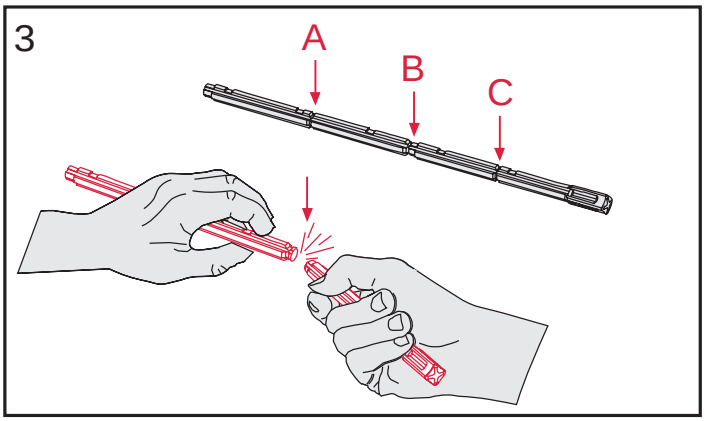
3
A
B
C

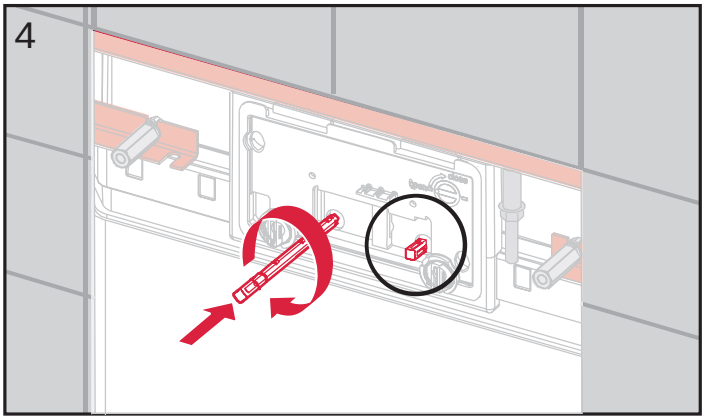
4

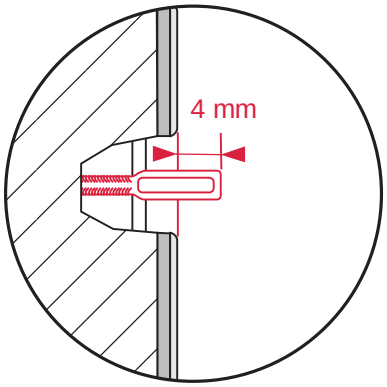
4 mm

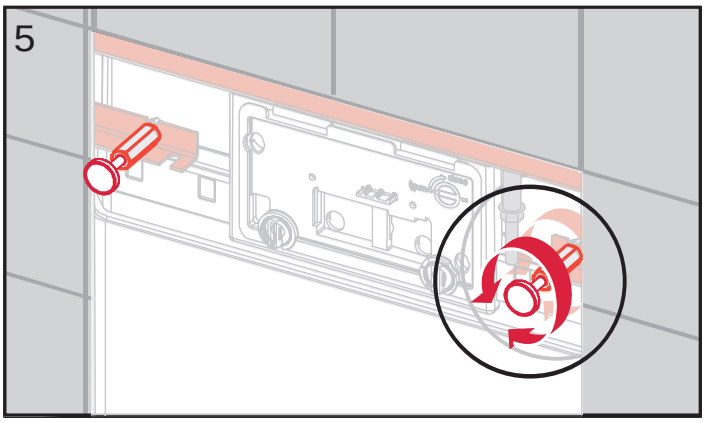
5

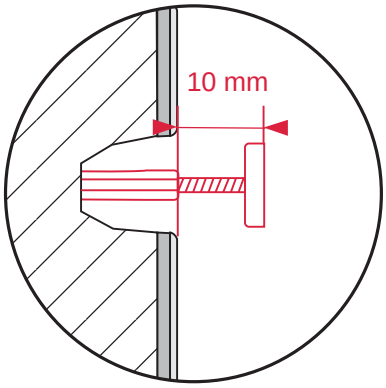
10 mm

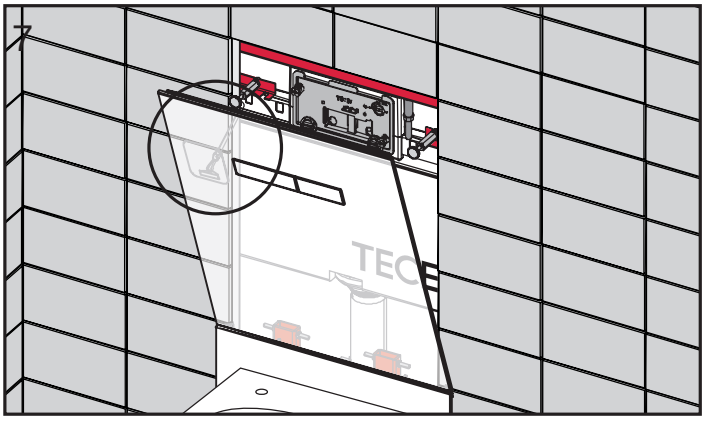

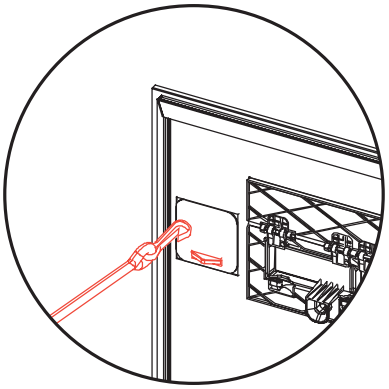

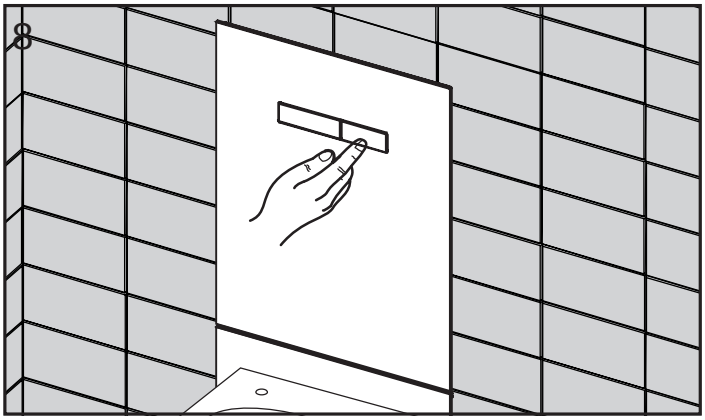

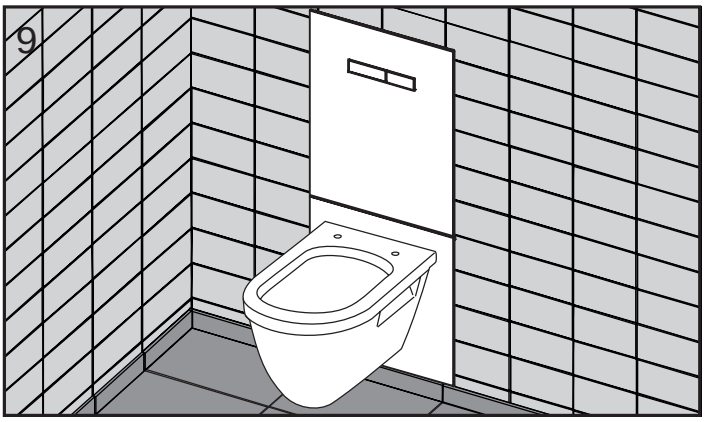

SP430 063 00 a